Game Appendix

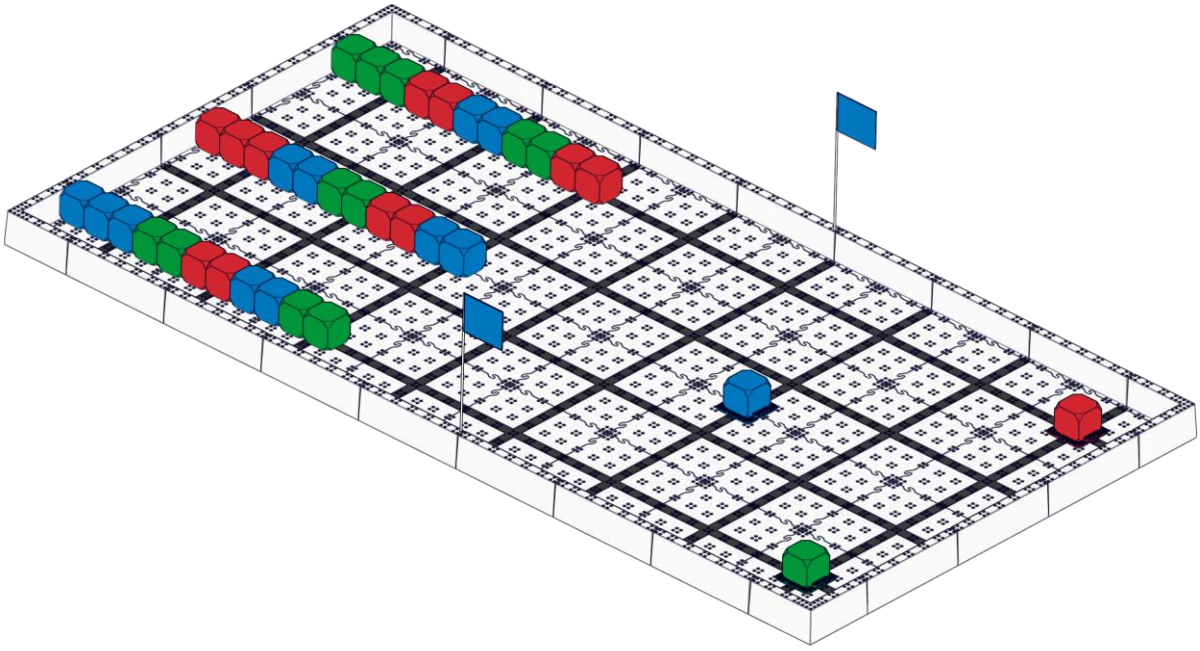

Table of Contents

The Game

Game Description

Matches are played on a field set up as illustrated in the figure below. The **Robot Skills Challenge, Programming Skills Challenge** and the **Teamwork Challenge** use the exact same field and set up.

In the Teamwork Challenge, an *Alliance* of two robots works together in each *Match*.

In the Robot Skills Challenge, one robot takes the field to score as many points as possible under driver control.

In the Programming Skills Challenge, one robot scores as many points as possible autonomously.

The object of the game is to attain the highest score by moving *Cubes* into the *Scoring Zone* and by making *Highrises* of *Cubes* of the same color on the *Highrise Bases.*

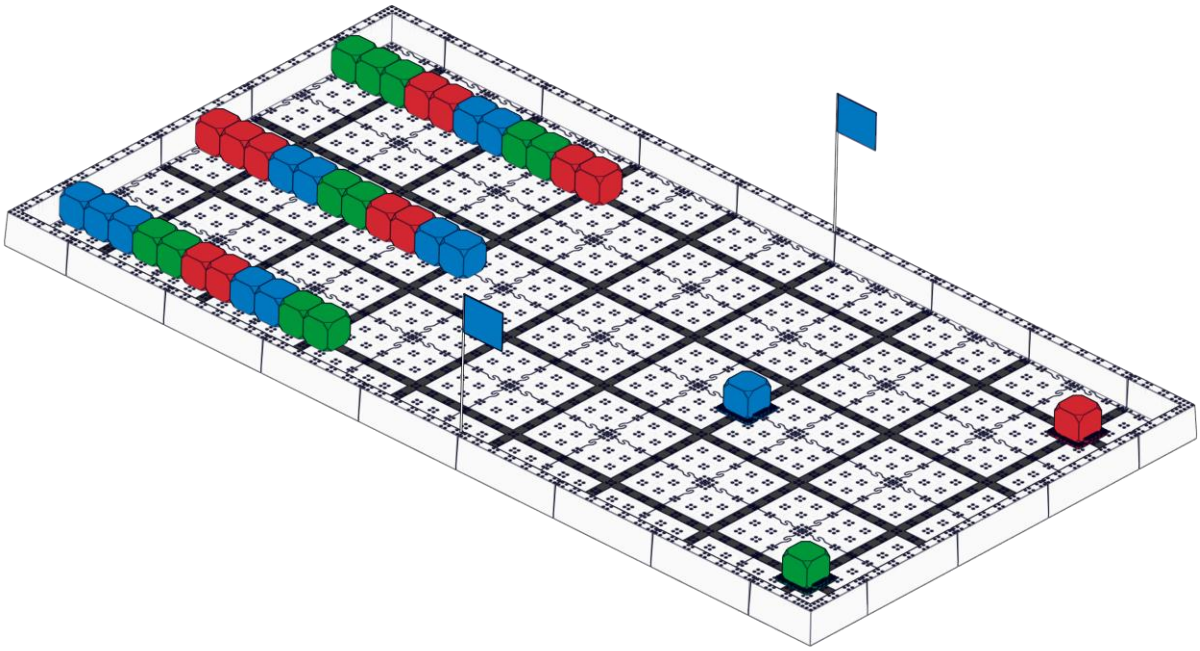

Figure 1 – *Isometric Drawing of the Field*

There are a total of thirty-six (36) *Cubes,* twelve (12) of each color, red, green, and blue, available as *Scoring Objects* in the game. There is one (1) *Scoring Zone* and three (3) *Highrise Bases* on the field.

Game Definitions

Alliance – A pre-assigned grouping of two teams that work together in a given *Teamwork Match*.

Alliance Score – Points scored in a *Teamwork Match* awarded to both *Teams*.

Autonomous – A *Robot* that is operating without any input from a controller

Cube – A red, green, or blue cube shaped plastic *Scoring Object* with dimensions of approximately 3".

Disqualification – A penalty applied to a team for a behavioral violation. A team that is *Disqualified* in a *Teamwork Match* receives zero (0) points. At the head referee's discretion, repeated violations and *Disqualifications* for a single team may lead to its *Disqualification* for the entire event.

Driver – A *Student* team member responsible for operating and controlling the *Robot*.

Driver Station – The region surrounding the non-*Scoring Zone* of the field, where the *Drivers* must remain during their *Teamwork Match*.

Field Element – The field perimeter, *Scoring Objects*, and any supporting structures.

Floor – The part of the playing field that is within the outer walls.

Highrise – A vertical structure of *Cubes* built upon any of three *Highrise Base Cubes*. A *Cube* is part of a *Highrise* if:

1. It is not being touched by a *Robot*
2. It is fully supported by a *Highrise* or it is a *Highrise Base Cube.* At the end of each *Match* referees will gently remove any *Robots* that are contacting a *Highrise* to ensure that the *Highrise* is not being supported by the *Robot*.

Highrise Base – The three sections of the field where *Highrises* can be built. *Highrise Bases* are bounded by the inner edges of four (4) VEX IQ beams that form a square, and have a *Highrise Base Cube* in the center.

Highrise Base Cube – The *Cubes* that start the *Match* in the *Highrise Bases*

Highrise Height – The number of vertically continuous *Cubes* of the same color in a *Highrise*, starting from the *Highrise Base Cube*. Should two or more Cubes of the same color be side-by-side above the Base Cube in a Highrise, only one of them will be counted as part of the Highrise Height.

Robot – Anything that has passed inspection that a team places on the field prior to the start of a *Match*.

Scored – A *Cube* is *Scored* in the *Scoring Zone* if it is partially within the three dimensional area defined by the infinite vertical projection of the *Scoring Zone*.

Scoring Zone – The section of the field that is bounded by the outer edge of the fifth black line parallel to the short walls, counting from the *Driver Station,* and the inner edges of the field walls.

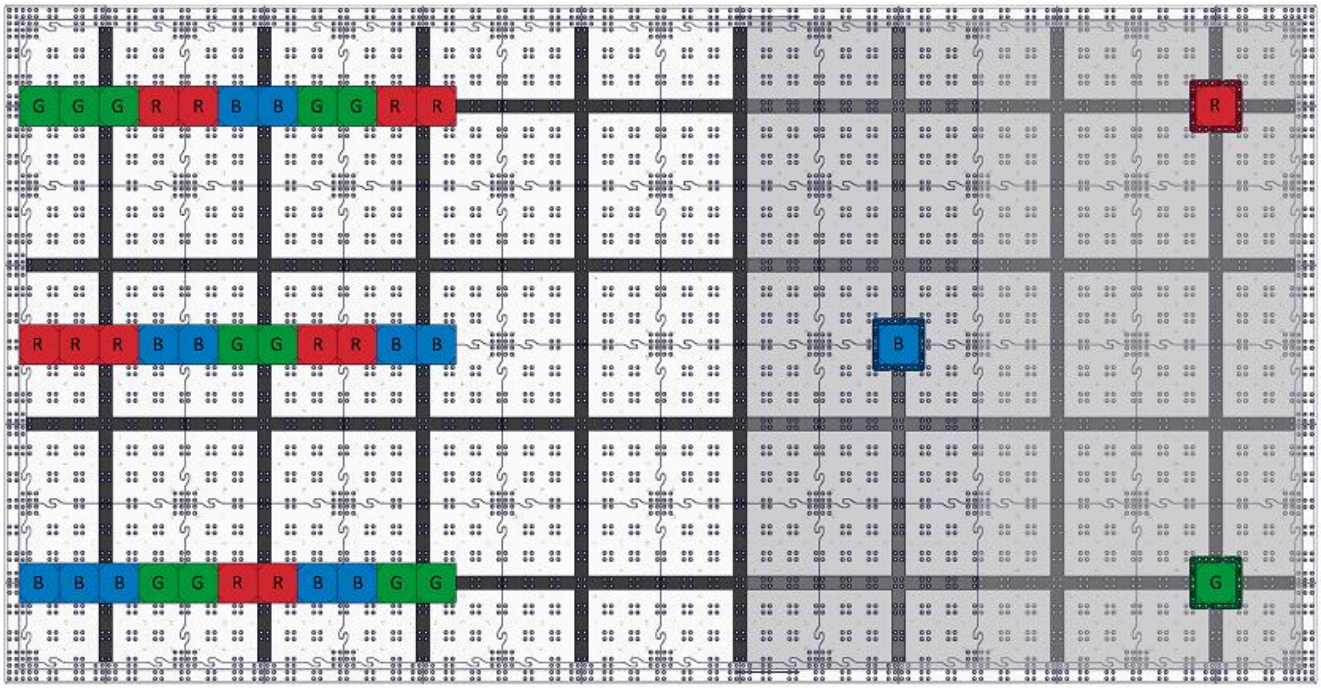

Figure 2 *– Scoring Zone Highlighted in Grey, Cube colors indicated by initial (Red = R, Blue = B, Green = G)*

Starting Positions – The two designated 13" x 19" spots on the field, where *Robots* must start the match.

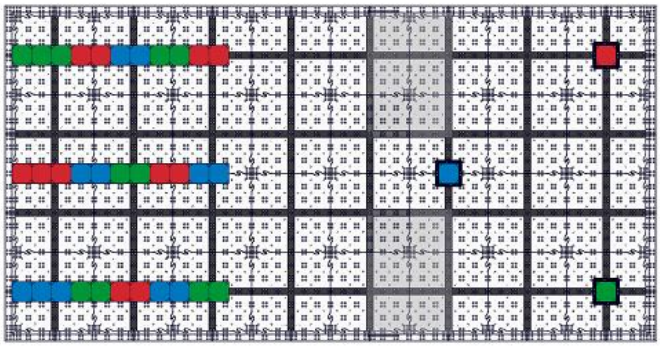

Figure 3 *– Starting Positions Highlighted in Grey*

Student – Anyone enrolled in a school or is home-schooled up through and including Middle School grade levels. *Students* can also be appropriately aged members of a community/youth organization or just a neighborhood group of *Students*. Students are the only individuals who design, build, repair, and program the Robot, with minimal adult assistance. Adults may **assist** Students in urgent situations, however adults should **never** work on a Robot without Students on that Team being present and actively participating.

Any *Student* who is 13 years or under as of April 23rd, 2015 is eligible to be on a VEX IQ team. Any *Student* who is 14 years of age on April 23rd, 2015 is only eligible if enrolled in the 8th grade or lower. Any *Student* 15 years of age or older on April 23rd, 2015 is ineligible.

The definition of elementary school, middle school, and high school enrollment determines student qualifications for VEX IQ. When a school has two or more groups together (K-8, K-12, 6-12), 9th grade is classified as high school, 6-8th grade as middle school, and below 6th grade as elementary school. The elementary and middle school students would be qualified to participate on a VEX IQ team. If the student is enrolled in a stand-alone school/district, which is classified differently by one year (middle school includes grades 7-9 and elementary is grades K-6), then the first definition applies and the 9th grade student is eligible to participate on a VEX IQ team.

Team – One or more middle school, elementary school or equivalent *Students* makes up a team. Middle school or elementary school designation is determined by the highest grade level or equivalent on the team. Teams may be associated with schools, community/youth organizations, or even a group of neighborhood *Students*.

Teamwork Match – A *Match* consists of a *Driver Controlled Period* for a total time of 1:00 (sixty seconds).

Highrise Game Rules

Scoring

- A *Cube Scored* in the *Scoring Zone* is worth a point value equal to the *Highrise Height* of the same color as the *Cube*. (e.g. If there is a red *Highrise* that is three (3) *Cubes* tall, all red *Cubes* in the *Scoring* Zone are worth three (3) points each.)

Safety Rules

<S1> If, at any time, the *Robot* operation or team actions are deemed unsafe or have damaged the *Field Elements* or *Scoring Objects*, by the determination of the referees, the offending team may be *Disqualified*. The *Robot* will require re-inspection before it may again take the field.

General Game Rules

<G1> When reading and applying the various rules in this document, please remember that common sense always applies in the VEX IQ Challenge.

<G2> At the beginning of a *Teamwork Match*, each *Robot* must:

a. Only contact the *Floor* within a 13” x 13” area
b. Fit within a 13” x 19” area, bounded by the *Starting Position*
c. Be no taller than 15”
d. Not touch any *Scoring Objects*

An offending *Robot* will be removed from the match at the Head Referee's discretion.

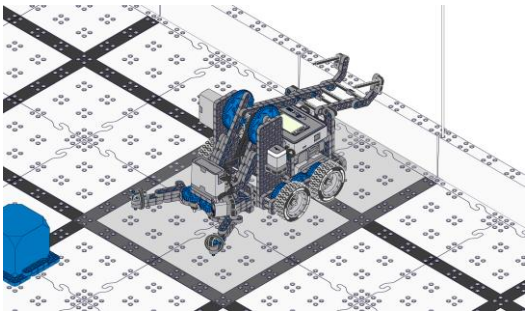

Figure 4 – *Example of a Legal Starting Position*

<G3> Each team shall include two *Drivers*. No *Driver* shall operate a *Robot* for more than thirty-five (35) seconds. Teams with only one *Student* member are granted an allowance to use a *Driver* from its *Alliance* partner. During a *Match*, *Robots* may only be operated by the *Drivers*. The two drivers must switch their controller between :25 and :35 remaining in the *Match.* The second *Driver* may not touch his/her team's controls until the controller is passed to him/her. Once the controller is passed, the first *Driver* may no longer touch his/her team's controls. Violations of this rule will result in a warning for minor offenses that do not affect the match. Egregious (match affecting) offenses will result in a *Disqualification*. Teams who receive multiple warnings may also receive a *Disqualification,* at the head referee's discretion.

<G4> During a *Teamwork Match*, the *Drivers* must remain in their *Driver Station*.

<G5> *Drivers* are prohibited from making intentional contact with any *Cube*, *Field Element* or *Robots* during a *Match.* Any intentional contact may result in a *Disqualification*. Accidental contact will not be penalized, unless the contact directly impacts the final outcome of the match. This type of accidental contact may result in a *Disqualification*.

<G6> *Cubes* that leave the playing field will be promptly returned to the playing field at the location nearest the point at which they exited.

a. *Highrise Base Cubes* that exit the *Highrise Base* will be promptly returned to their designated *Highrise Base*
b. *Cubes* will never be returned to a *Highrise*

<G7> Scores will be calculated for all *Matches* immediately after the *Match,* once all objects on the field come to rest. Referees will not review any videos or pictures from the *Match*.

<G8> *Robots* may not intentionally detach parts during any *Match*, or leave mechanisms on the field. If an intentionally detached component or mechanism affects game play, the team shall be *Disqualified* at the referee's discretion. Multiple intentional infractions may result in *Disqualification* for the entire event.

<G9> *Robots* must be designed to permit easy removal of *Game Objects* from any grasping mechanism without requiring that the *Robot* have power after the *Match*.

<G10> Field tolerances may vary by as much as ±1", so teams must design *Robots* accordingly.

<G11> Replays are at the discretion of the event organizer and head referee, and will only be issued in the most extreme circumstances.

<G12> All teams are expected to conduct themselves in a respectful and positive manner while participating in VEX IQ Challenge events. If team members are disrespectful or uncivil to event staff, volunteers or fellow teams, they may be *Disqualified* from their current or upcoming *Match*. It is important to remember that we are all judged based on how we deal with adversity. It is expected that all team members exhibit positive conduct and good sportsmanship when dealing with any difficult situations that may present themselves in the VEX IQ Challenge and life in general.

We count on the adults to embody and model respect, courtesy, and a positive attitude, both at an event and in the design/building process leading up to an event. In all aspects of the VEX IQ program, the students make the decisions and do the work, with adult mentorship. The VEX community prides itself on being a positive learning environment, where no one, especially an adult, ever harasses, berates or places unnecessary stress upon students and/or event volunteers. We view stressful and difficult situations as teachable moments to model positive behaviors and good sportsmanship.

<G13> If a *Robot* goes completely out-of-bounds (outside the playing field), gets stuck, tips over, or otherwise is in need of assistance, the *Drivers* may retrieve and reset the robot. In the process they must move the *Robot* such that it is touching the field perimeter. Before retrieving its *Robot*, the team must signal the referee by placing its controller down such that it is not in the hands of either driver. Any Cubes in possession of the Robot while being handled must be removed from the Robot and taken out of play for the remainder of the Match.

This rule is intended to help teams keep their robots functional during the match. It is intended so teams can fix damaged robots, or help get their robots "out of trouble." It is not intended for teams to use as part of a strategy to gain an advantage in a match. If referees see teams intentionally or repeatedly doing this, they may be disqualified from said match.

<G14> All rules in this manual are subject to changes, and not considered official until June 2nd, 2014. We do not expect any major changes to take place; however we do reserve the right to make changes until June 2nd, 2014. There will also be scheduled manual updates on August 1st, 2014 and April 6th, 2015. Teams are strongly encouraged to review the VEX IQ forum for rule updates and clarifications: www.vexiqforum.com

Robot Inspection

Description

Every *Robot* will be required to pass a full inspection before being cleared to participate in the Challenge. This inspection will ensure that all *Robot* rules and regulations are met. Initial inspections will typically take place during team registration/practice time. Every team should use the rules below as a guide to pre-inspect its *Robot* and ensure that it meets all requirements.

Definitions

Robot – An operator controlled vehicle designed and built by a VEX IQ Challenge team to perform specific tasks on the field. The robot may be constructed using only the VEX IQ platform parts. No other parts will be allowed on the *Robot*. Prior to participating in the robot matches, each *Robot* will be required to pass an inspection. Additional inspections may be required at the discretion of event personnel.

Inspection Rules

<R1> The team's *Robot* must pass inspection before being allowed to participate in any *Matches*. Noncompliance with any *Robot* design or construction rule may result in disqualification of the *Robot* at an event.

- If significant changes are made to a robot, it must be re-inspected before it will be allowed to participate in a Match.
- Teams may be requested to submit to random spot-inspections by event personnel. Refusal to submit will result in disqualification.
- Referees or inspectors may decide that a robot is in violation of the rules. In this event, the team in violation will be disqualified and the robot will be barred from the playing field until it passes re-inspection.

<R2> Only one (1) robot will be allowed to participate per team in the VEX IQ Challenge. Though it is expected that teams will make changes to their robot at the event, a team is limited to only one (1) robot. The VEX IQ System is intended to be a mobile robotics design platform. As such, a VEX IQ Challenge robot, for the purposes of the VEX IQ Challenge, has the following subsystems:

Subsystem 1: Mobile robotic base including wheels, tracks, or any other mechanism that allows the robot to navigate the majority of the flat playing field surface.
Subsystem 2: Power and control system that includes a VEX IQ legal battery, a VEX IQ control system, and associated Smart Motors for the mobile robotic base.
Subsystem 3: Additional mechanisms (and associated Smart Motors) that allow manipulation of game objects or navigation of field obstacles.

Given the above definitions, a minimum robot for use in any VEX IQ Challenge event (including Skills Challenges) must consist of subsystem 1 and 2 above. Thus if you are swapping out an entire subsystem of either item 1 or 2, you have now created a second robot and are no longer legal.

a. Teams may not participate with one robot, while a second is being modified or assembled.
b. Teams may not switch back and forth between multiple robots during an event.

<R3> To participate in an official VEX IQ Challenge Event a team must first register on robotevents.com. Upon registering they will receive their VEX IQ Challenge Team Number and a welcome kit containing VEX IQ Challenge License Plates. Every robot should have their VEX IQ Challenge License Plates displayed on two opposing sides, with their VEX IQ Challenge Team Number clearly written on.

a. The VEX IQ Challenge License Plates are considered a non-functional decoration, and cannot be used as a functional part of the robot.
b. These number plates must fulfill all robot rules

Figure 5 – *A VEX IQ Challenge License Plate with a VEX IQ Challenge Team Number written in.*

<R4> At the start of each Match, the *Robot* must satisfy the following constraints.

a. Only contact the *Floor* within a 13” x 13” area
b. Fit within a 13” x 19” area, bounded by the *Starting Position*
c. Be no taller than 15”

A robot may expand beyond its starting size constraints after the start of a match.

<R5> The starting configuration of the *Robot* at the beginning of a match must be the same as a *Robot* configuration inspected for compliance, and within the maximum allowed size.

a. Teams using more than one *Robot* configuration at the beginning of matches must tell the inspector(s) and have the *Robot* inspected in its largest configuration(s).
b. A team may NOT have its *Robot* inspected in one configuration and then place it at the start of a match in an uninspected configuration.

<R6> Robots may be built ONLY from Official **Robot** Components from the VEX IQ product line, unless otherwise specifically noted within these rules.

a. During inspections if there is a question about whether something is an official VEX IQ component, a team will be required to provide documentation to an inspector that proves the component’s source. Such types of documentation include receipts, part numbers, or other printed documentation.
b. Only the VEX IQ components specifically designed for use in Robot construction are allowed. Using additional components outside their typical purpose is against the intent of the rule (i.e. please don’t try using VEX IQ apparel, team or event support materials, packaging or other non-robot products on a VEX IQ Challenge Robot).
c. Products from the VEX EDR or VEXpro product line cannot be used for robot construction. Products from the VEX product line that are also cross listed as part of the VEX IQ product line are legal.
d. Mechanical/structural components from the VEX Robotics by Hexbug product line are legal for robot construction. However, electrical components from the VEX Robotics by Hexbug product line are illegal for robot construction.
e. Official Robotics Components from the VEX IQ product line that have been discontinued are still legal for robot use. However teams must be aware of <R6a>
f. 3D printed versions of VEX IQ components are not legal for use.

<R7> Official VEX IQ products are ONLY available from VEX & Official VEX Resellers. To determine whether a product is “official” or not, consult www.vexiq.com

<R8> Robots are allowed to use the following additional "non-VEX IQ" components:

a. Teams may add appropriate non-functional decorations provided that these do not affect the robot performance in any significant way or affect the outcome of the match. These decorations must be in the spirit of the event. Inspectors will have the final say in what is considered "nonfunctional".
   i. Any decorations must be backed by legal materials that provide the same functionality, i.e. if your robot has a giant decal that prevents *Game Objects* from falling out of the robot, the decal must be backed by VEX IQ material that also prevents the *Game Objects* from falling out
   ii. The use of non-toxic paint is allowed as a non-functional decoration. However, teams should be careful, as the use of paint may affect how VEX IQ parts "snap" together. Also, any paint being used as an adhesive would be classified as functional.
b. Rubber bands that are identical in length and thickness to those included in the VEX IQ product line

<R9> Additional VEX IQ products that are released during the challenge season are considered legal for use.

a. Some "new" components may have certain restrictions placed on them upon their release. These restrictions will be documented in a Team Update. Team Updates will be posted to the "VEX IQ Challenge Highrise" home page in the Competition section of www.VEXrobotics.com

<R10> Robots must use ONLY one (1) VEX IQ Robot Brain.

a. Robot brains, microcontrollers, or other electronic components that are part of the VEX EDR or VEXpro product line are not allowed.

<R11> Robots may use up to six (6) VEX IQ Smart Motors.

<R12> The only allowable sources of electrical power for a VEX IQ Challenge Robot is any single (1) VEX IQ Battery Pack

a. Additional batteries cannot be used on the robot (even ones that aren't connected).

<R13> Parts may NOT be modified.

a. Examples of modifications include, but are not limited to, bending and cutting. In general, VEX IQ components should be considered sacred and not be modified in any way.
b. <R8ii> is an exception to this rule.

<R14> The following types of mechanisms and components are NOT allowed:

a. Those that could potentially damage playing field components.
b. Those that could potentially damage other robots.
c. Those that pose an unnecessary risk of entanglement.

<R15> A *Robot* is deemed successfully inspected when it has been recorded as "passed" by an Inspector and the inspection form has been signed by the Inspector and a student team member.

<R16> Teams must bring their robots to the field prepared to play. Teams must have their batteries charged before they place the robot on the field.

The Event

Description

The VEX IQ Challenge will consist of:

- Teamwork Challenge
  - Each Teamwork Challenge Match consists of two teams, operating as an alliance, to score points. The Teamwork Challenge may include *Practice*, *Qualifying*, and *Finals Matches*. After the *Qualifying Matches*, teams will be ranked based on performance. Typically the top teams will then participate in the *Finals Matches* to determine the Teamwork Challenge champions. The number of teams participating in the *Finals Matches* is determined by the Event Partner.
- Robot Skills Challenge
  - Each Robot Skills Challenge Match is entirely driver controlled and consists of a single robot trying to score as many points as possible.
- Programming Skills Challenge
  - Each Programming Skills Challenge Match is entirely autonomous (no controller) and consists of a single robot trying to score as many points as possible.

Awards will be given to top teams in each format. Awards will also be given for overall performance in the judged criteria. Please review the Awards Appendix for more details.

Definitions

Disqualification – A penalty applied to a team for a behavioral violation. When a team is disqualified in a *Match,* they receive zero (0) points.

Finals Match – A match used to determine the Teamwork Challenge champions.

Practice Match – An un-scored match used to provide time for teams to get acquainted with the official playing field.

Programming Skills Match – A *Programming Skills Match* consists of a sixty (60) second *Autonomous Period*, and only one robot.

Robot Skills Match – A *Robot Skills Match* consists of a sixty (60) second *Driver Controlled Period* and only one robot.

Qualifying Match – A *Teamwork Match* used to determine the rankings.

Teamwork Challenge Qualifying Matches

At the event, *Practice Matches* may be played from the team registration time until the team meeting begins. Every effort will be made to equalize practice time for all teams, but they may be conducted on a first-come, first-served basis. These matches are not scored, and will not affect team ranking.

Schedule

- The *Qualifying Match* schedule will be available prior to opening ceremonies on the day of the event. This schedule will indicate alliance partners and match pairings. For events with multiple fields, the schedule will also indicate on which field the match will take place.
- The *Qualifying Matches* will start immediately after opening ceremonies in accordance with the qualifying match schedule.
- Teams will be randomly assigned an alliance partner to collaborate in each *Qualifying Match*.
- All teams will be scored on the same number of *Qualifying Matches*.
- In some cases, a team will be asked to play in an additional *Qualifying Match*, but will not receive credit for playing this extra match.

Teamwork Challenge Rankings

- At the conclusion of each match, the score will be determined.
  - Each robot will receive the points scored for the Alliance Score
- For a *Qualifying Match*, if **no** member of a team is present in the driver station at the start of a match, that team is declared a “no show” and will receive zero (0) points. A “no show” is treated exactly the same as a *Disqualification*. The team’s alliance partner will receive all points scored in this Match.
- Each team will have the same number of *Qualifying Matches*
- Points earned for each team in each *Qualifying Match* are added to get the team’s total points
- One out of every four (4) *Qualifying Matches* will not count towards the rankings. If an event has between four (4) and seven (7) *Qualifying Matches* per team, then the lowest score for each team will not be counted. If an event has between eight (8) and eleven (11) rounds, then the two lowest scores for each team will not be counted. If an event has twelve (12) or more rounds, then the three lowest scores will not be counted.
- Teams are ranked by total points.
- Ties in ranking are broken by:
  - Removing the lowest score from each team’s total and comparing the new total score
  - If still tied, the next lowest score will be removed (on through all scores)
  - If still tied, events may declare a tie, or elect to have a *Robot Skills Match* as a playoff to determine placement

Teamwork Challenge Finals Matches

- At the conclusion of *Qualification Matches*, the top teams will advance to the *Finals Matches*.
- The number of *Finals Matches* will be determined by the event organizers.
- The first and second ranked teams form an alliance, third and fourth ranked teams form another alliance (and so on) for the *Finals Matches*.
- Starting with the lowest ranked alliance, each alliance participates in ONE Finals Match. After all the Finals matches are run, the highest score of those matches is the winning alliance. Second highest score finishes in second place, and so on. (If there is a tie, the higher ranked alliance, prior to the *Finals Matches*, shall be declared to finish higher)

Teamwork Challenge Rules

<T1> Referees have ultimate authority during the event, including all three challenges. **Their rulings are final.**

a. The referees will not review any recorded replays.
b. Referees will review the field at the end of each match and accurately record the game score. If there is a disagreement with the scoring, only the team drivers, not an adult, may share their questions or concerns with the referee. Once the field is cleared for the next team, the drivers can no longer dispute the match score.

<T2> The only people from a team permitted to be by the playing field are the two drivers, who are identified by their drive team badges. These badges are interchangeable, but not during a match.

<T3> During matches, two teams form an alliance that will play on the field.

<T4> There are no time outs in the *Qualifying Matches* or *Finals Matches*.

<T5> At many events, the playing field will be placed on the floor. Some event partners may choose to elevate the playing fields. At the 2015 VEX Robotics World Championship the platforms will be 18” high.

Robot Skills Challenge Rules

Please note that all rules from “The Game” section of the manual apply to Robot Skills, unless otherwise specified.

At the beginning of each *Robot Skills Match*, the robot may be placed in either of the two *Starting Positions* on the field.

Robot Skills Challenge Scoring

All scoring is the same as outlined in “The Game” section of this manual.

- A *Cube Scored* in the *Scoring Zone* is worth a point value equal to the *Highrise Height* of the same color as the *Cube*. (e.g. If there is a red *Highrise* that is three (3) *Cubes* tall, all red *Cubes* in the *Scoring* Zone are worth three (3) points each.)

Robot Skills Challenge Format

- The Robot Skills Challenge field is set up as described in “The Game” section of this manual.
- Teams will play *Robot Skills Matches* on a “first come, first served” basis.
- Teams may participate in a number of *Robot Skills Matches*, to be determined by the event organizers.
- There will be two drivers for the *Robot Skills Match*. *Drivers* must switch their controller with between :35 and :25 remaining in the *Robot Skills Match*. If a team only has one *Driver*, that *Student* may only operate the *Robot* for a maximum of thirty five (35) seconds

Robot Skills Challenge Rankings

- For each *Robot Skills Match,* teams are awarded a score based on the above scoring rules.
- Teams will be ranked based on highest *Robot Skills Match* scores, with the team with the highest score being declared the Robot Skills Champion.
- In the case where two teams are tied for the highest score, the tie will be broken by looking at the next highest Robot Skills Match score for both teams, and so on, if necessary.
- If the tie still isn’t broken, events may choose to allow teams to have one more deciding match or both teams will be declared the Champion.

Programming Skills Challenge Rules

Please note that all rules from "The Game" section of the manual apply to Programming Skills, unless otherwise specified.

At the beginning of each *Programming Skills Match*, the robot may be placed in either of the two *Starting Positions* on the field.

Programming Skills Definitions

Programming Skills Highrise – The same as a normal *Highrise;* however, the *Programming Skills Highrise* does not have to consist of *Cubes* of the same color.

Programming Skills Highrise Color – The color of the Highrise Base *Cube* in a *Programming Highrise*

Programming Skills Challenge Scoring

Scoring is NOT the same as outlined in "The Game" section of this manual.

- A *Cube Scored* in the *Scoring Zone* is worth a point value equal to the *Programming Skills Highrise Height* of the same color as the *Cube*. Note: *Programming Skills Highrise Color* is defined at the *Highrise Base Cube* color. (e.g. If the red *Highrise Base Cube* is in a *Programming Skills Highrise* that is three (3) *Cubes* tall, regardless of the color of the other *Cubes* in the *Programming Skills Highrise*, all red *Cubes* in the *Scoring* Zone are worth three (3) points each.)
- If a *Programming Skills Highrise* consists solely of *Cubes* of one color, then the *Scored Cubes* of this color are all worth double the Programming Skills Highrise Height. (e.g. If the red *Highrise Base Cube* is in a *Programming Skills Highrise* that is three (3) *Cubes* tall, with all cubes in the *Programming Skills Highrise* being red, then all red *Cubes* in the *Scoring* Zone are worth six (6=2x3) points each.)

Programming Skills Challenge Format

- The Programming Skills Challenge field is set up as described in "The Game" section of this manual.
- Teams will play *Programming Skills Matches* on a "first come, first served" basis.
- Teams may participate in a number of *Programming Skills Matches*, to be determined by the event organizers.

Programming Skills Challenge Rankings

- For each *Programming Skills Match,* teams are awarded a score based on the above scoring rules.
- Teams will be ranked based on highest *Programming Skills Match* scores, with the team with the highest score being declared the Programming Skills Challenge Champion.
- In the case where two teams are tied for the highest score, the tie will be broken by looking at the next highest *Programming Skills Match* score for both teams, and so on, if necessary.
- If the tie still isn't broken, events may choose to allow teams to have one more deciding match or both teams may be declared the Champion.

Programming Skills Challenge Specific Rules

<PSC1> A team may handle their *Robot* as many times as they want during a *Programming Skills Match.*

a. Upon handling the *Robot*, it must be immediately brought back to a legal starting position
b. If the *Robot* is possessing any *Scoring Object* when the *Robot* is being handled, these *Scoring Objects* will be removed from the playing field and can no longer be used

<PSC2> Teams must bring *Robot* controllers to the field with them, although drivers start the robot by pressing a button on the brain and may not engage the robot with the controller during the match.